ACCESSORIES

NIPPON CHEMI-CON would like to serve the customers with smaller and higher qualified products.
Please name your best suited attaching parts in installation.

◆Accessories used for choke coils of upright type

Unit : [mm]

Pedestal P/N XD1408VL (2PBF)

P/N of available core : NS/AQD/CPF

Standard

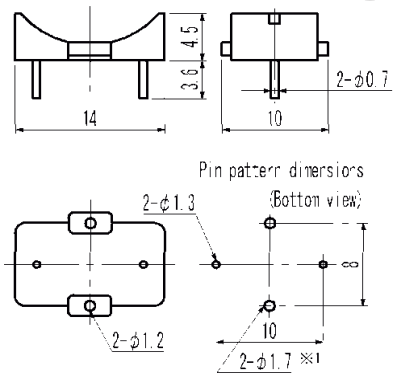

Pedestal P/N XD1610VW (2PBF)

P/N of available core : N1/N2

Standard

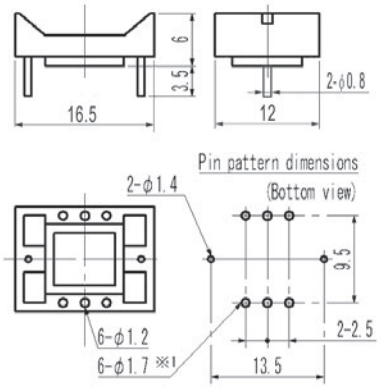

Pedestal P/N XD2212VW (2PBF)

P/N of available core : ASD

Standard

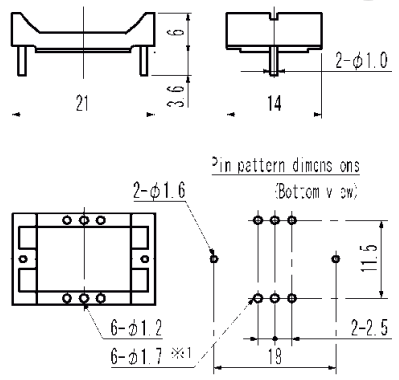

Pedestal P/N XD2811VW (2PBF)

P/N of available core : G4/N5/ARD/CTB

Standard

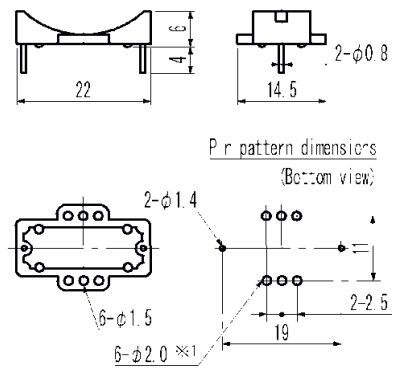

Pedestal P/N XD2314VW (2PBF)

P/N of available core : G3/NU/NP

Standard

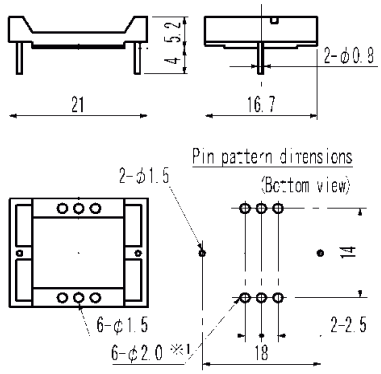

Pedestal P/N XD3415VW (4PBF)

P/N of available core : G6/G7/G8/J7H/J8H/N6
/N7/X6/X7/X8/AUD

Standard

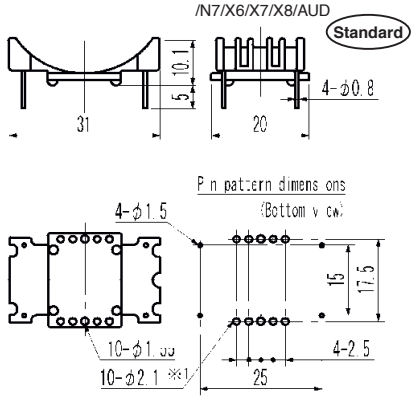

Pedestal P/N XD3417VL (4PBF)

P/N of available core : G6/G7/G8/J7H/J8H/N6/N7/
X6/X7/X8/AUD

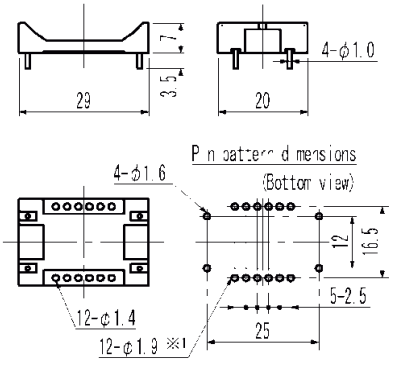

Pedestal P/N XD3418VW (4PBF)

P/N of available core : G6/G7/G8/J7H/J8H/N6/N7/
X6/X7/X8/AUD

Standard

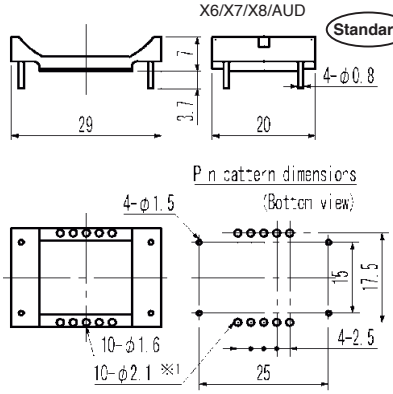

Pedestal P/N XD4420VW (4PBF)

P/N of available core : G9/G0/GJ/JRH/JAH/JBH/
N9/XR/CYF/CYB

Standard

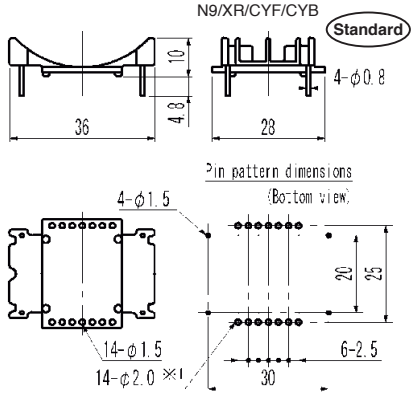

*1 In the case of a lead wire with greatest dimensions.
*2 The Specification with auxiliary pins is marked by ( ).

Product specifications in this catalog are subject to change without notice.Request our product specifications before purchase and/or use. Please use our products based on the information contained in this catalog and product specifications.

◆Accessories used for choke coils of upright type

Unit : [mm]

Pedestal P/N XD4227VL (4PBF)

P/N of available core : G9/G0/GJ/JRH/JAH /JBH/N9/XR/CYF/CYB

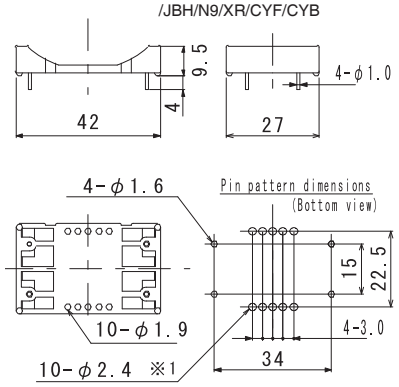

Pedestal P/N XD5625VW (4PBF)

P/N of available core : GQ/GK/JCH /JKH/WKH

Standard

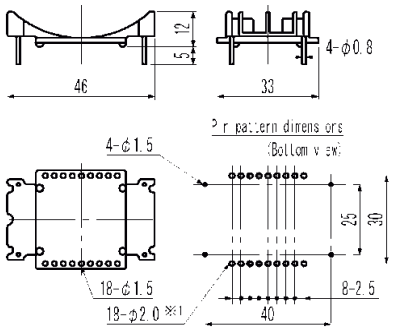

Pedestal P/N XD5239VL (4PBF)

P/N of available core : GQ/GK/JCH /JKH/WKH

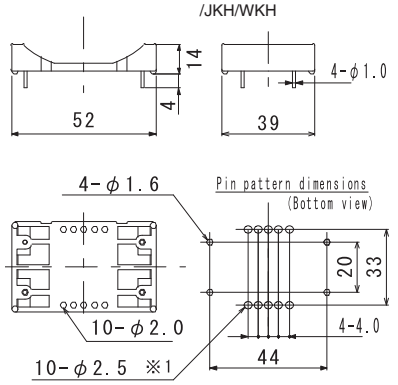

◆Accessories used for choke coils of lying type

Unit : [mm]

Pedestal P/N XD3237HW (2PBF)

P/N of available core : G6/G7/G8/J7H/J8H /N6/N7/X6/X7/X8/AUD

Standard

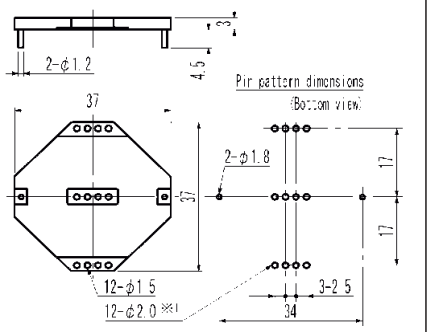

Pedestal P/N XD4449HW (2PBF)

P/N of available core : G0/GJ/JBH

Standard

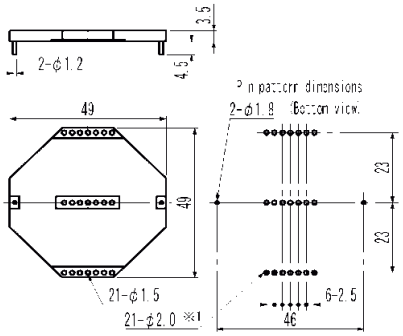

Pedestal P/N XD4054HW (2PBF)

P/N of available core : G9/JRH/JAH /N9/XR

Standard

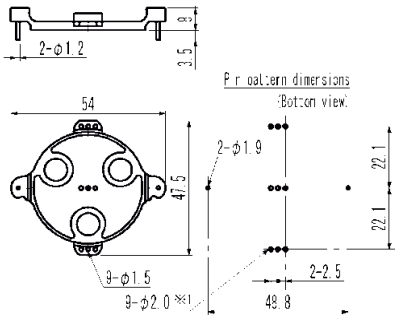

Pedestal P/N XD5358HW (4PBF)

P/N of available core : GQ/GK/JCH/JKH/WKH

Standard

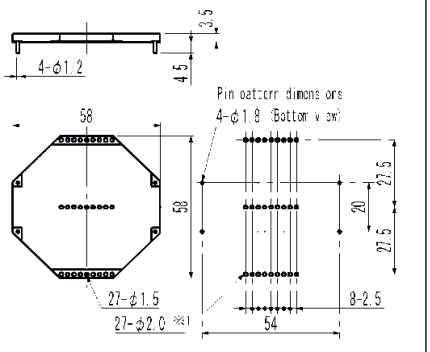

Pedestal P/N XD7070HL

P/N of available core : LGQ

Standard

Coil positioning projections

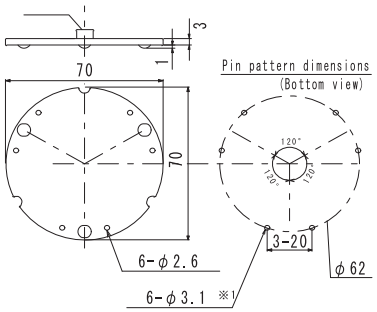

Pedestals for 2P coils are also available.

- The specification described in this manual is defined on the basis of the documentation, information, and data obtained when the document is written. However, the actual performance of each product may vary depending on the configuration of the circuit including the product. Therefore, confirm the performance and stability of the product in the circuit which you design.
- In general, electronic components may generate heat depending on their operating conditions. Accordingly, never use the products near some flammable substances. In addition, never use the products if any specification exceeds the rated value. This may cause human injury and/or device failure.
- Handle the coils carefully so that rear short circuits may not occur.
- The product specification may be subject to change without notice for improvement.

Product specifications in this catalog are subject to change without notice.Request our product specifications before purchase and/or use. Please use our products based on the information contained in this catalog and product specifications.