3-Megapixel Camera Module with Built-in ISP 【Under Development】NCM30-AA

NCM30-AA is a color camera module with built-in ISP.
It has 1920 horizontal and 1536 vertical pixels and conforms to the 1/2.44″ optical format.
This is a high-resolution camera module equipped with a wide-angle lens.
It can be configured for various environments, including high dynamic range (HDR) and LED Flicker Mitigation (LFM).

1. Features

- MIPI CSI-2
- LED flicker suppression (LFM)
- Wide-angle Lens
- HDR

2. Specification

● Image Sensor	1/2.44-inch CMOS color sensor
● Shutter Type	Rolling shutter
● Dimension	27 × 18 [mm]
● Effective Pixels	1920(H) × 1536(V)
● Pixel Size	3.0μm(H) × 3.0μm(V)
● Output Interface	MIPI CSI-2 serial output (4 lanes)
● Output Signal Format	YUV422
● Frame rate (Max.)	30fps
● Function	Auto Exposure Control, Auto White Balance, Auto Gain Control, HDR, Image Inversion (up/down, left/right), LED flicker suppression (LFM), etc.
● Angle of View (Typ.)	(H)122°/(V)96°/(D)160°
● Optical Filter	IRCF
● F Number	F2.4
● Connection Type	FPC connector ※1
● Power Consumption (Typ.)	560 [mW]

※1 : The FPC connector model number is "FH34SRJ-30S-0.5SH(50)".
Please contact us separately if a dedicated FPC is required.

3. Recommended Operating Conditions

● Analog Power Supply (AVDD)	3.3 ± 0.3	[V]
● Digital Power supply (DVDD)	1.1 ± 0.1	[V]
● I/O Power supply (HVDD)	1.8 ± 0.18	[V]
● Operating Temperature	-30 ～ +80	[℃] ※2
● Storage Temperature	-40 ～ +85	[℃] ※2

※2 : No condensation

Nippon Chemi-Con Corporation

The specifications in this document are subject to change without notice for improvement.
This document does not grant any license to industrial property rights or any other rights related to the contents herein.
Reproduction or reprinting of this material without written consent of the Company is strictly prohibited.

4. Terminal Description

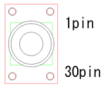

No	Symbol	I/O	Terminal Description	No.	Symbol	I/O	Terminal Description
1	GND	–	Ground	16	GND	–	Ground
2	GND	–	Ground	17	MIPI_A_P	O	Digital data output (Lane0_P)
3	AVDD	–	Analog power supply	18	MIPI_A_N	O	Digital data output (Lane0_N)
4	HVDD	–	I/O power supply	19	GND	–	Ground
5	DVDD	–	Digital power supply	20	MIPI_CLK_P	O	Data clock (Clock_P)
6	DVDD	–	Digital power supply	21	MIPI_CLK_N	O	Data clock (Clock_N)
7	FSIN	I	Frame synchronous signal	22	GND	–	Ground
8	VSYNC	O	Vertical synchronous signal	23	MIPI_B_P	O	Digital data output (Lane1_P)
9	SDA	I/O	I2C serial data	24	MIPI_B_N	O	Digital data output (Lane1_N)
10	SCL	I	I2C serial clock	25	GND	–	Ground
11	GND	–	Ground	26	MIPI_D_P	O	Digital data output (Lane3_P)
12	RESET	I	System reset	27	MIPI_D_N	O	Digital data output (Lane3_N)
13	GND	–	Ground	28	DGND	–	Ground
14	MIPI_C_P	O	Digital data output (Lane2_P)	29	MCLK	I	System clock
15	MIPI_C_N	O	Digital data output (Lane2_N)	30	GND	–	Ground

5. External Dimensions

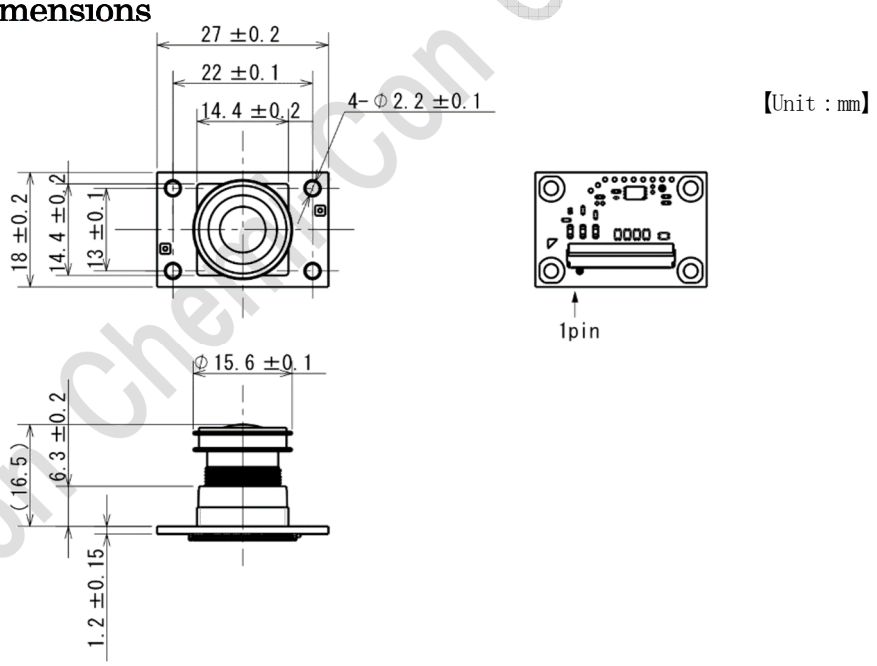

6. Image Capture Polarity



Nippon Chemi-Con Corporation

The specifications in this document are subject to change without notice for improvement.
This document does not grant any license to industrial property rights or any other rights related to the contents herein.
Reproduction or reprinting of this material without written consent of the Company is strictly prohibited.

7. Handling Precautions

This camera module is designed to be installed in electronic equipment. When using the product, please design for safety by paying close attention to the following precautions:

1) Operating temperature
Make sure that the internal temperature of the device does not exceed the operating temperature.

2) Light resistance of CMOS image sensor
If it is used under sunlight for a long period of time, optical performance may be affected due to deterioration of the lens and sensor.
Please check in advance in the operating environment.

3) Mounting method
This camera module is not designed to be dust-proof or drip-proof. When installing the camera module on a device,
Please pay attention to waterproofing and prevention of dust from entering the device.

4) Electrostatic protection
Please handle this camera module in the same way as semiconductor devices to prevent electrostatic breakdown.
Recommended Environment
(1) The worktable and the floor in the work area should be covered with a conductive mat to eliminate static electricity.
(2) Workers should wear antistatic clothing and grounding bands, and the like.
(3) Use non-charged jigs, boxes, bags, and the like.
(4) Use an ionizer or the like to eliminate static electricity when handling the product.

5) Mechanical strength
This camera module is a precision optical component. Please handle with care to avoid excessive mechanical shock.
In particular, please do not apply any stress such as load to the device during and after the installation of the FFC and connector.
In addition, please take care to prevent dust and dirt from adhering to the lens surface and take care not to scratch the lens when removing foreign objects from the lens surface or when handling the lens.

6) Disassembly and modification
Do not disassemble or modify the lens. The company does not provide any warranty if the lens is disassembled, modified, or otherwise altered.

7) Safety standards
This camera module is a semi-completed product (module parts) and safety standards are not guaranteed.
Customers are requested to obtain safety standards for their finished equipment.

8) Safety design
Although we strive to improve the quality and reliability of our products, semiconductor products in general may malfunction or fail.
When using this camera module, the customer is responsible for the safety design of the equipment to ensure that life,
human body, or property will not be infringed due to malfunction or failure of the camera module.

9) Storage
This camera module is a precision optical component. Avoid storing the camera module in an environment with high temperature,
high humidity, dust, and direct sunlight.

10) Use for specific applications
This camera module is designed and manufactured for general electronic equipment (computers, personal devices,
office equipment, measuring instruments, industrial robots, home appliances, etc.).
If the product is to be used in an application that requires a particularly high level of quality and reliability and where failure or malfunction of the product may cause damage to human life or property (Nuclear power control equipment, aerospace equipment,
transportation equipment, traffic signal equipment, combustion control, medical equipment, life support systems,
various safety devices, etc. (hereinafter referred to as Specific Applications)), please consult with our contact person in advance and discuss the matter with them before use.

This shall not apply in cases where the conditions of use, etc. are confirmed in writing upon consultation between the two parties.
If this camera module is used for Specific Application without prior consultation,
we shall not be liable for any damage resulting from such use.

11) Radiation-proof design
This product is not designed to withstand radiation.

12) Handling of export-controlled cargo
When exporting or taking this product or its technical information out of Japan, please follow the proper export procedures in accordance with the latest laws and regulations stipulated in the relevant ministerial ordinances of the Foreign Exchange and Foreign Trade Law (Foreign Exchange and Foreign Trade Law).

13) Laws, regulations and rules
This camera module may not be used for applications for which the manufacture or sale of the camera module is prohibited by domestic.

Nippon Chemi-Con Corporation

The specifications in this document are subject to change without notice for improvement.
This document does not grant any license to industrial property rights or any other rights related to the contents herein.
Reproduction or reprinting of this material without written consent of the Company is strictly prohibited.