NCM20-YB is a color camera module with a built-in ISP and a waterproof housing that complies with Full HD resolution. It has 1920 horizontal pixels and 1080 vertical pixels, and conforms to the 1/2.7" optical format. It supports HD-TVI communication and enables long-distance analog transmission up to 40 m.

1.Features

- HD-TVI
- HDR
- Wide-Angle Lens
- Waterproof(IP67)

2. Specification

● Image Sensor	1/2.7 inch CMOS color image sensor
● Shutter Type	Rolling shutter
● Dimension(mm)	32.6 × 32.6 × 40.6[mm] ※1
● Effective Pixels	1920(H) × 1080(V)
● Pixel Sie	3.0μm(H) × 3.0μm(V)
● Output Interface	Analog
● Output Signal Format	HD-TVI
● Frame Rate(Max.)	30fps
● Functions	Auto Exposure Control, Auto White Balance, Auto Gain Control, Flicker correction, Waterproof & Dustproof Performance (IP67),etc.
● Angle of View (Typ.)	(H)169°/(V)92°/(D)199°
● Optical Filter	IRCF
● F Number	F2.8
● Connection type	Relay connector
● Power consumption (Typ.)	1100 [mW]

※1 : Relay connector and Cable part is not included

3. Recommended Operating Conditions

● Recommended supply voltage	12.0	[V]
● Power Supply Voltage	10.0 ～ 12.0	[V]
● Operating Temperature	-30 ～ +65	[℃] ※2
● Storage Temperature	-40 ～ +85	[℃] ※2

※2 : No condensation.

Nippon Chemi-Con Corporation

The specifications in this document are subject to change without notice for improvement.
This document does not grant any license to industrial property rights or any other rights related to the contents herein.
Reproduction or reprinting of this material without written consent of the Company is strictly prohibited.

4. Terminal Description

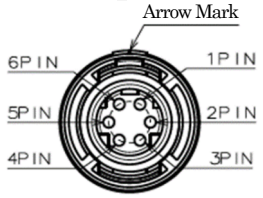

Conector : HIROSE
Modeli number : HR30-6PA-6S(71)

Terminal	Symbol	I/O	Description
1	Power	—	POWER
2	N.C.	—	N.C.
3	PGND	—	P-GROUIND
4	N.C.	—	N.C.
5	SGND	—	S-GROUND
6	Signal	O	VIDEO Signal

5. External Dimensions

【Unit : mm】

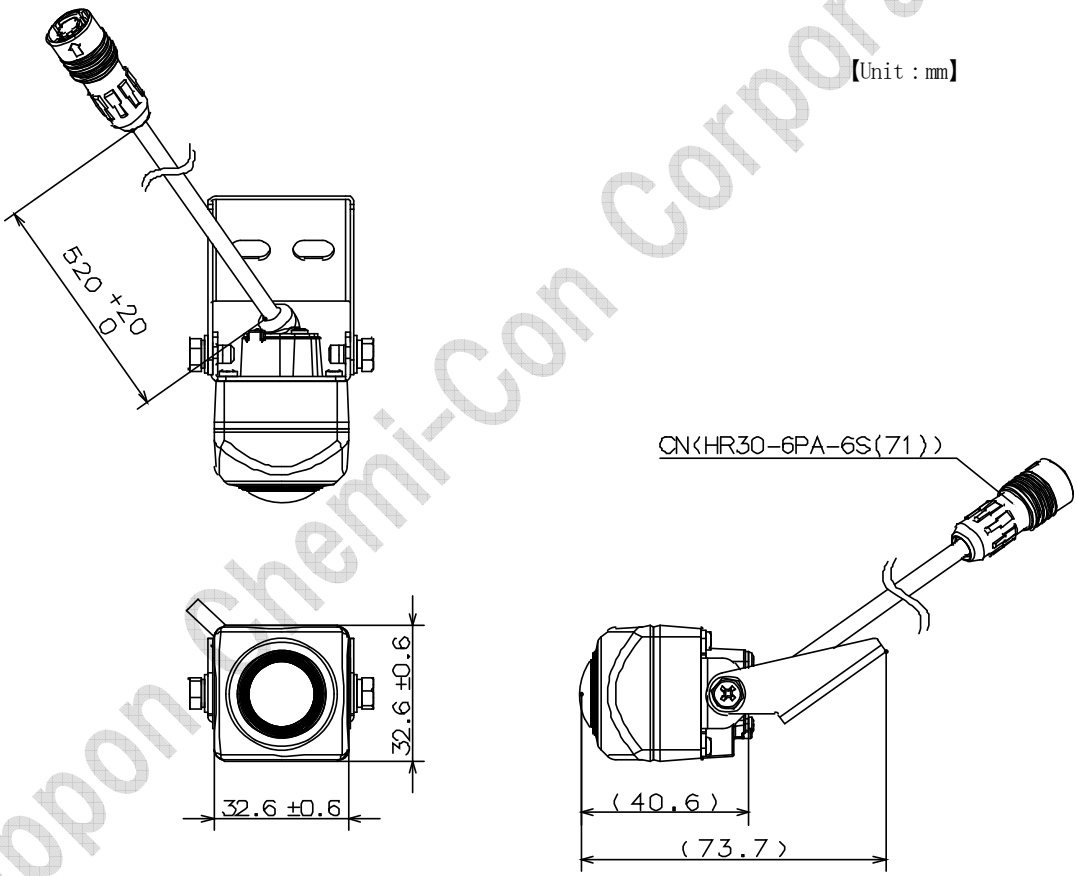

6. Image Capture Polarity



Image

The specifications in this document are subject to change without notice for improvement.
This document does not grant any license to industrial property rights or any other rights related to the contents herein.
Reproduction or reprinting of this material without written consent of the Company is strictly prohibited.

Nippon Chemi-Con Corporation

7. Handling Precautions

This camera module is designed to be installed in electronic equipment. When using the product, please design for safety by paying close attention to the following precautions:

1) Operating temperature
Make sure that the internal temperature of the device does not exceed the operating temperature.

2) Light resistance of CMOS image sensor
If it is used under sunlight for a long period of time, optical performance may be affected due to deterioration of the lens and sensor.
Please check in advance in the operating environment.

3) Mounting method
This camera module is not designed to be dust-proof or drip-proof. When installing the camera module on a device,
Please pay attention to waterproofing and prevention of dust from entering the device.

4) Electrostatic protection
Please handle this camera module in the same way as semiconductor devices to prevent electrostatic breakdown.
Recommended Environment
(1) The worktable and the floor in the work area should be covered with a conductive mat to eliminate static electricity.
(2) Workers should wear antistatic clothing and grounding bands, and the like.
(3) Use non-charged jigs, boxes, bags, and the like.
(4) Use an ionizer or the like to eliminate static electricity when handling the product.

5) Mechanical strength
This camera module is a precision optical component. Please handle with care to avoid excessive mechanical shock.
In particular, please do not apply any stress such as load to the device during and after the installation of the FFC and connector.
In addition, please take care to prevent dust and dirt from adhering to the lens surface and take care not to scratch the lens when removing foreign objects from the lens surface or when handling the lens.

6) Disassembly and modification
Do not disassemble or modify the lens. The company does not provide any warranty if the lens is disassembled, modified, or otherwise altered.

7) Safety standards
This camera module is a semi-completed product (module parts) and safety standards are not guaranteed.
Customers are requested to obtain safety standards for their finished equipment.

8) Safety design
Although we strive to improve the quality and reliability of our products, semiconductor products in general may malfunction or fail. When using this camera module, the customer is responsible for the safety design of the equipment to ensure that life, human body, or property will not be infringed due to malfunction or failure of the camera module.

9) Storage
This camera module is a precision optical component. Avoid storing the camera module in an environment with high temperature, high humidity, dust, and direct sunlight.

10) Use for specific applications
This camera module is designed and manufactured for general electronic equipment (computers, personal devices, office equipment, measuring instruments, industrial robots, home appliances, etc.).
If the product is to be used in an application that requires a particularly high level of quality and reliability and where failure or malfunction of the product may cause damage to human life or property (Nuclear power control equipment, aerospace equipment, transportation equipment, traffic signal equipment, combustion control, medical equipment, life support systems, various safety devices, etc. (hereinafter referred to as Specific Applications)), please consult with our contact person in advance and discuss the matter with them before use.

This shall not apply in cases where the conditions of use, etc. are confirmed in writing upon consultation between the two parties.
If this camera module is used for Specific Application without prior consultation, we shall not be liable for any damage resulting from such use.

11) Radiation-proof design
This product is not designed to withstand radiation.

12) Handling of export-controlled cargo
When exporting or taking this product or its technical information out of Japan, please follow the proper export procedures in accordance with the latest laws and regulations stipulated in the relevant ministerial ordinances of the Foreign Exchange and Foreign Trade Law (Foreign Exchange and Foreign Trade Law).

13) Laws, regulations and rules
This camera module may not be used for applications for which the manufacture or sale of the camera module is prohibited by domestic

Nippon Chemi-Con Corporation

The specifications in this document are subject to change without notice for improvement.
This document does not grant any license to industrial property rights or any other rights related to the contents herein.
Reproduction or reprinting of this material without written consent of the Company is strictly prohibited.